BrightWave
THE TECH INSIDE
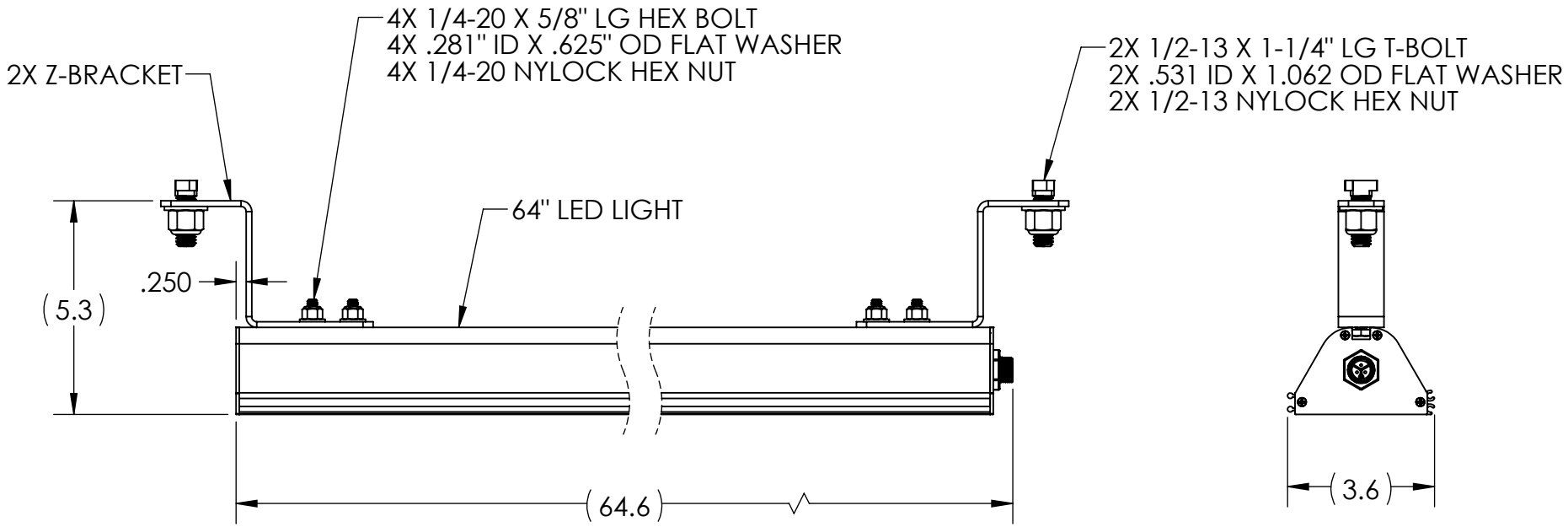
LIGHT MOUNT ASSEMBLY - 64"