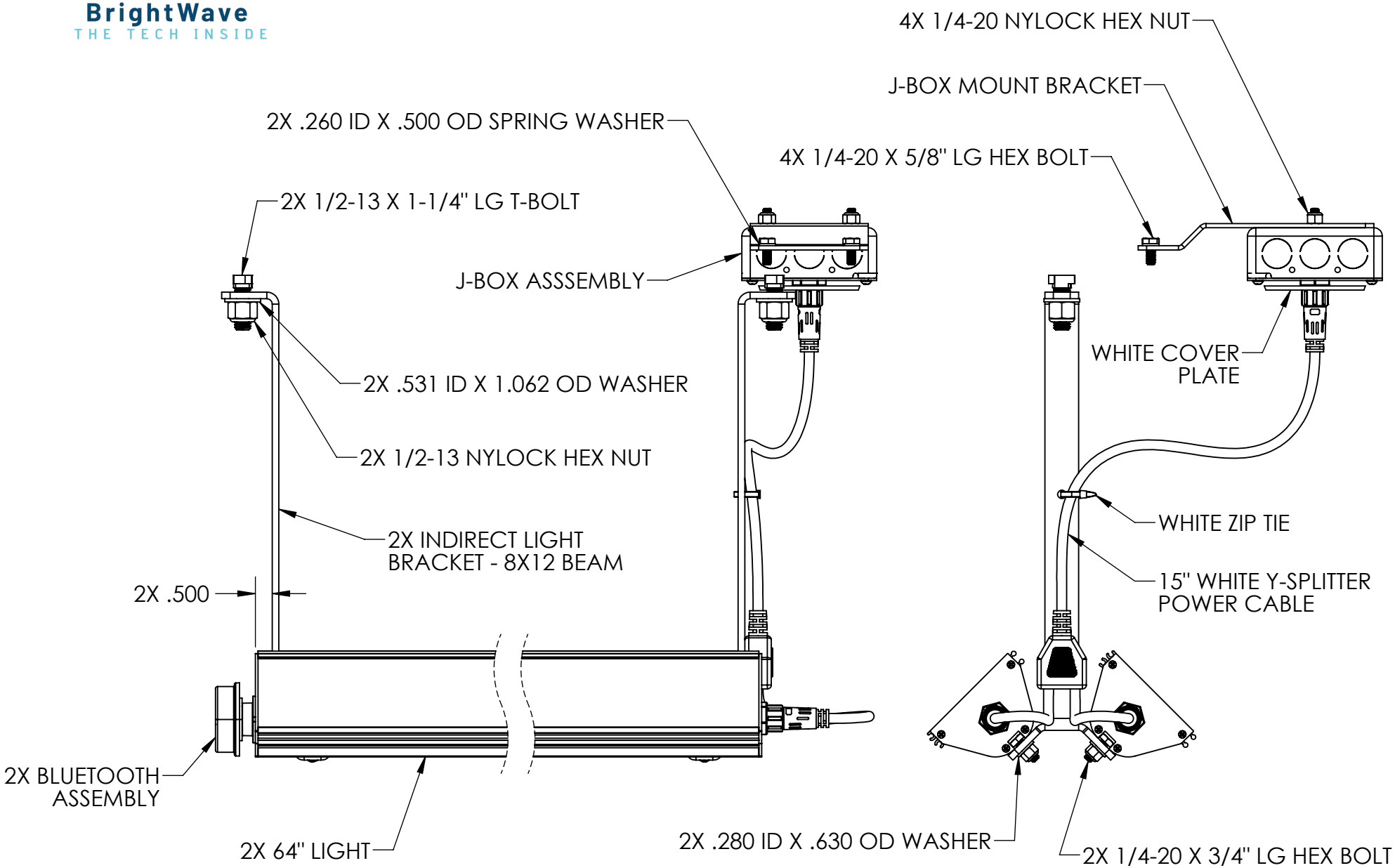INDIRECT LIGHT ASSEMBLY - 8X12 BEAM